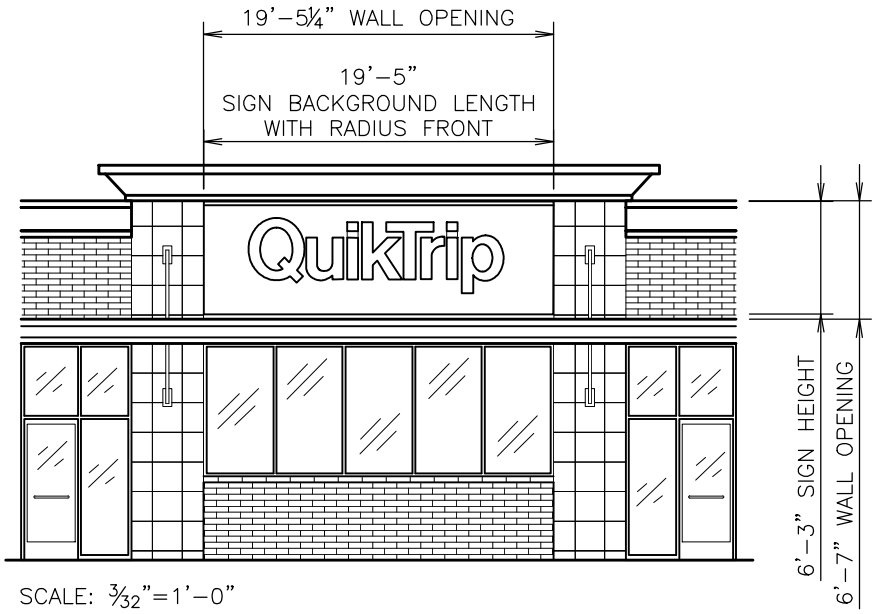

SCALE: 3/32"=1'–0"

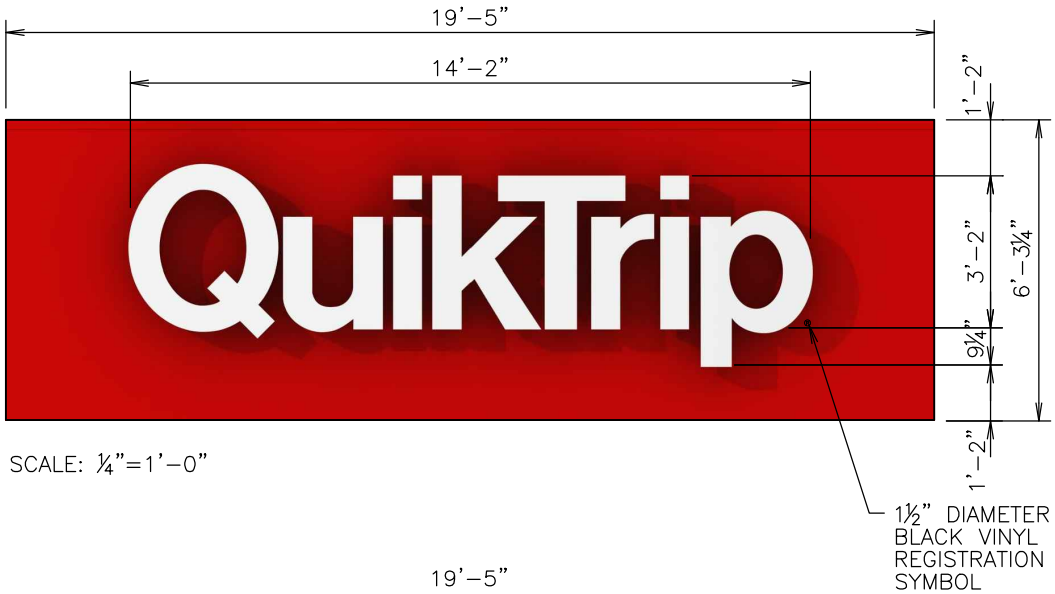

SCALE: ¼"=1'–0"

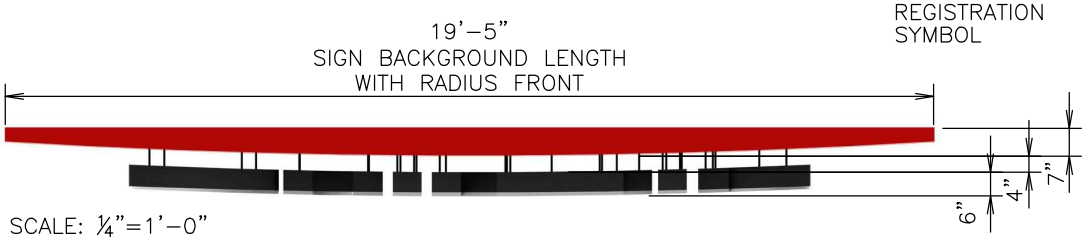

SCALE: ¼"=1'–0"

QuikTrip

4705 S. 129th E. Ave. - Tulsa, OK 74134-7008
P.O. Box 3475 - Tulsa, OK 74101-3475
p:918.615.7704

Channel Letters Wall Sign

CL-60R

NOTES	
DRAWN BY	
ISSUE DATE	11/07/12

SQUARE FOOTAGE	
TYPEFACE	59
INSIDE CAN	
ENTIRE SIGN	121

SPECIFICATIONS:

Letters

6" deep Channel Letters, 3/16" formed Cyro Translucent White face, Aluminum Construction. Letter Returns painted Benjamin Moore 2134-30 Iron Mountain. Internally illuminated with GE Tetra MiniMax 65K White/GE PS12-60 Power Supplies. Halo backlit illuminated with Red GE Tetra MiniMax/GE PS12-60 Power Supplies. Letters are projected 4" off back panel with Lag Bolts.

Red Back Panel

.125 thick Aluminum, painted to match 3M Cardinal Red Translucent #3632-53 with Akzo Nobel, Satin Finish.

SCALE:
AS NOTED
SERIAL NUMBER:
CL-60R
STORE NUMBER:

C:\Vault_QT\Library\Presentation\Elevations\Signage\Misc Signs\CL-60R.dwg - I_#00 PlotDate: 12/11/2014 11:15 AM - Kim, Joe

QuikTrip
4705 S. 129th E. Ave. - Tulsa, OK 74134-7008
P.O. Box 3475 - Tulsa, OK 74101-3475
p:918.615.7704

Canopy ID
IDC-20

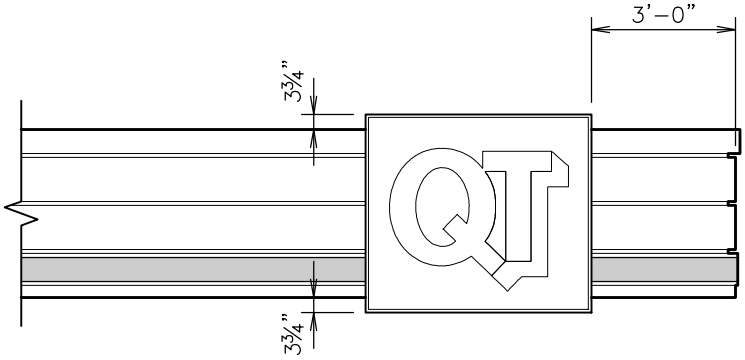

CANOPY ELEVATION

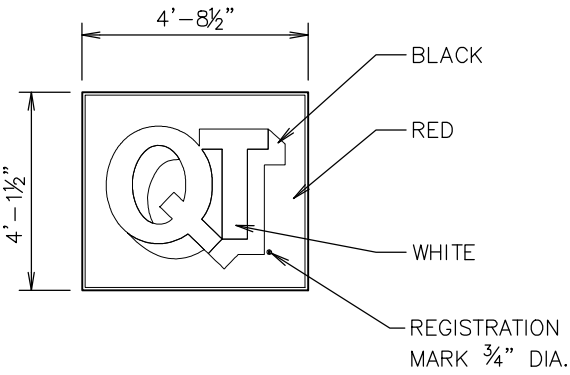

FRONT ELEVATION

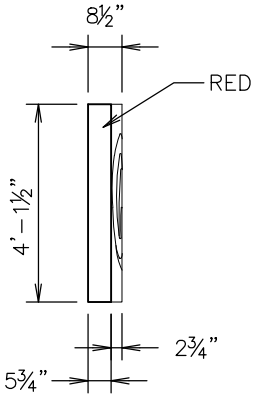

SIDE ELEVATION

NOTES	
DRAWN BY	
ISSUE DATE	11/07/12

SQUARE FOOTAGE	
TYPEFACE	10
INSIDE CAN	
ENTIRE SIGN	20

SPECIFICATIONS:

LOGO
Flat Solar grade, Clear Cyro Face, .177 thickness, painted on 2nd surface to match 3M Cardinal Red Translucent #3632-53 with Akzo Nobel, no embossment.

LOGO Cabinet
Aluminum Construction, Internally illuminated with GE Tetra PowerStrip DS65/GE PS24 Power Supplies. Painted Akzo Noble, QT Red SIGN9141 Low Gloss.

SCALE:
1/4" = 1'-0"

SERIAL NUMBER:
IDC-20

STORE NUMBER:

C:\Vault_QT\Library\Presentation\Elevations\Signage\Misc Signs\IDC-20.dwg - I_#00 PlotDate: 12/11/2014 11:12 AM - Kim, Joe

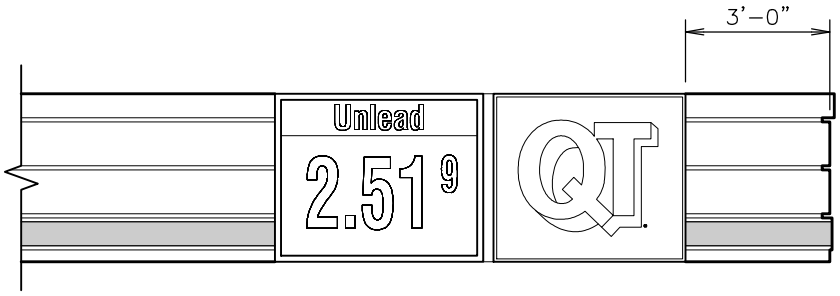

CANOPY ELEVATION

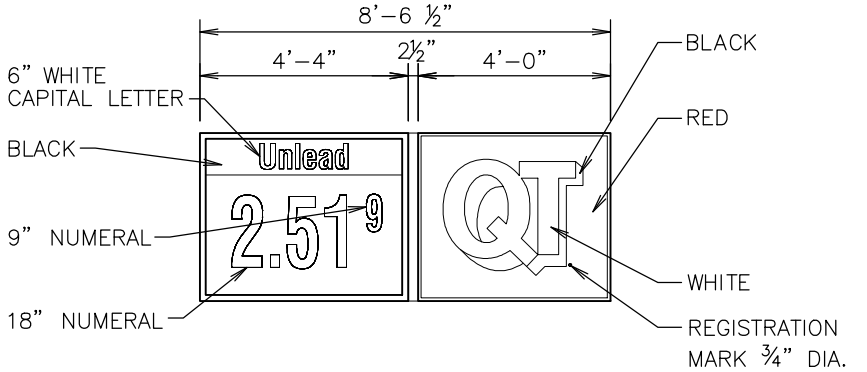

FRONT ELEVATION

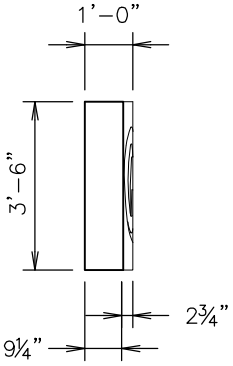

SIDE ELEVATION

QuikTrip

4705 S. 129th E. Ave. - Tulsa, OK 74134-7008
P.O. Box 3475 - Tulsa, OK 74101-3475
p:918.615.7704

Canopy Pricer ID
IDCP-30UR

NOTES	
DRAWN BY	
ISSUE DATE	11/07/12

SQUARE FOOTAGE	
TYPEFACE	14
INSIDE CAN	
ENTIRE SIGN	30

SPECIFICATIONS:

- LOGO - Flat Solar grade, Clear Cyro Face, .177 thickness, painted on 2nd surface to match 3M Cardinal Red Translucent #3632-53 with Akzo Nobel, no embossment.
- Pricer - Flat Solar grade, Clear Cyro Face, .177 thickness, painted on 2nd surface, Akzo Noble Black, Scrolling Price Numerals, White Helvetica Condensed font, Unlead Product Panels, White text area, painted 2nd surface Akzo Nobel Opaque Black.
- LOGO Cabinet/Pricer Cabinet - Aluminum Construction, Internally illuminated with GE Tetra PowerStrip DS65/GE PS24 Power Supplies. LOGO Cabinet painted Akzo Noble, QT Red SIGN9141 Low Gloss. Pricer Cabinet painted Akzo Noble Black Low Gloss. Accent Trim section painted 1st surface Akzo Noble Silver-Low Gloss.

SCALE:
1/4" = 1'-0"

SERIAL NUMBER:
IDCP-30UR

STORE NUMBER:

C:\Vault_QT\Library\Presentation\Elevations\Signage\Misc Signs\IDCP-30UR.dwg - I_#00 PlotDate: 1/5/2015 3:01 PM - Kim, Joe

QuikTrip
4705 S. 129th E. Ave. - Tulsa, OK 74134-7008
P.O. Box 3475 - Tulsa, OK 74101-3475
p:918.615.7700

Vertical Monument Sign
MV12-2P

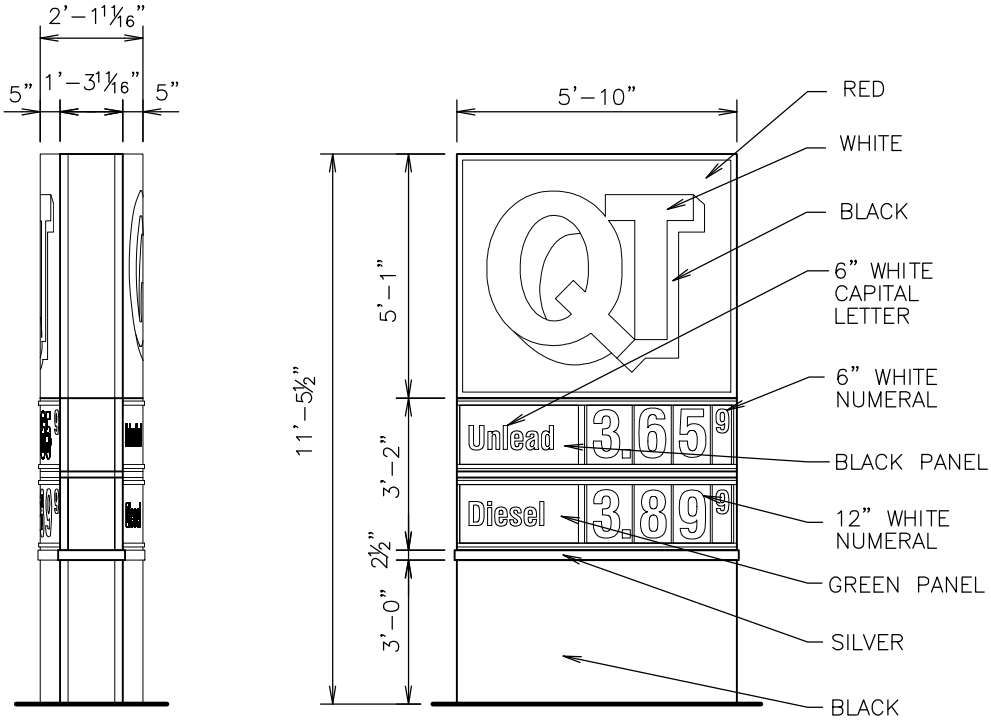

NOTES	
DRAWN BY	XXX
ISSUE DATE	12/9/14

SQUARE FOOTAGE	
TYPEFACE	
INSIDE CAN	
ENTIRE SIGN	49

SPECIFICATIONS:

Logo: Flat Solar grade, Clear Cyro Face, .177 thickness, painted on 2nd surface to match 3M Cardinal Red Translucent #3632-53, Akzo Nobel, no embossment.

Unlead Panel : .177" thickness Cyro Acrylic with 1/4" Radius Corners. Panels are painted 2nd Surface with Akzo Noble Opaque Black Background with Translucent White Text

Diesel Panel: .177" thickness Cyro Acrylic with 1/4" Radius Corners. Panels are painted 3M 3632 GPS-26 Green with Matching PMS #349C Green with Translucent White Text

Logo Cabinet/Pricer Cabinet/Base: Aluminum Construction, Internally illuminated with GE Tetra PowerStrip DS65/GE PS24 Power Supplies. LOGO Cabinet painted Akzo Noble, QT Red SIGN9141 Low Gloss. Pricer Cabinet and Base painted Akzo Noble Black Low Gloss. Accent Trim section painted 1st surface Akzo Noble Silver-Low Gloss.

SCALE: 1/4" = 1'-0"

SERIAL NUMBER: MV12-2P

STORE NUMBER:

C:\Vault_QT\Library\Presentation\Elevations\Signage\Standard Monument Signs\MV12-2P.dwg - L_#00 PlotDate: 12/10/2014 3:43 PM - Kim, Joe

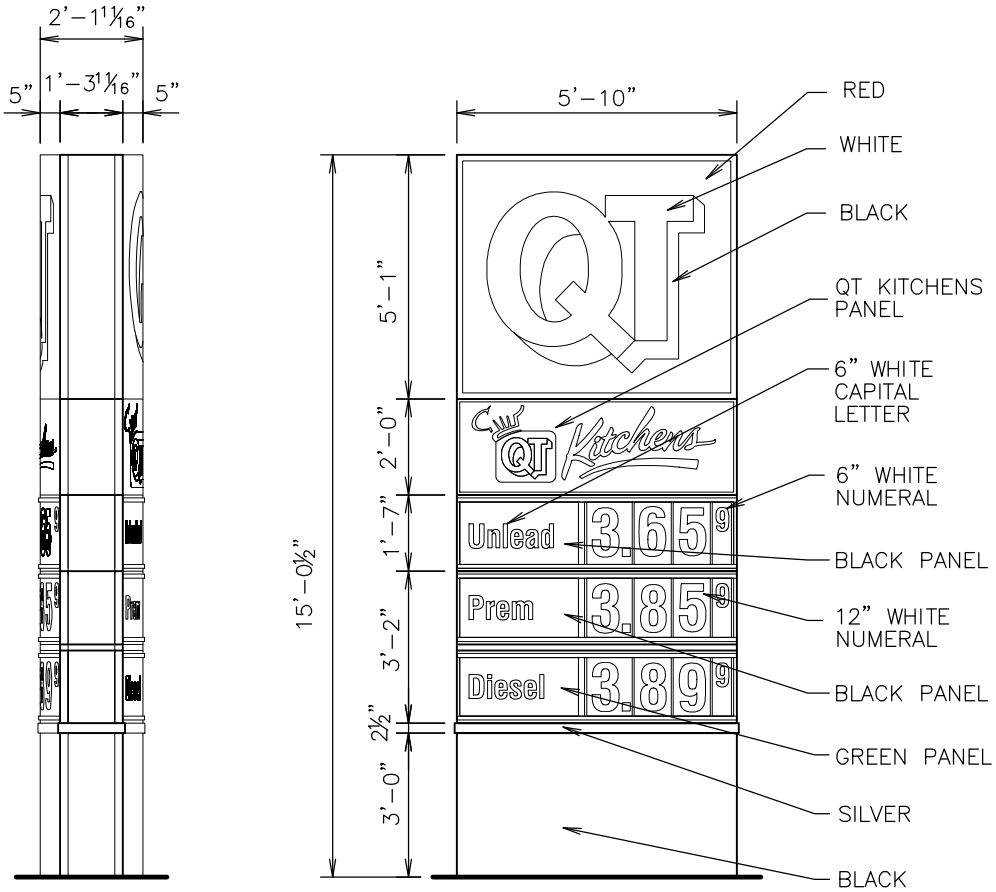

QuikTrip

4705 S. 129th E. Ave. – Tulsa, OK 74134-7008
P.O. Box 3475 – Tulsa, OK 74101-3475
p:918.615.7704

Vertical Monument Sign

MV12-3PQ

NOTES	
DRAWN BY	XXX
ISSUE DATE	12/9/14

SQUARE FOOTAGE	
TYPEFACE	
INSIDE CAN	
ENTIRE SIGN	69

SPECIFICATIONS:

Logo: Flat Solar grade, Clear Cyro Face, .177 thickness, painted on 2nd surface to match 3M Cardinal Red Translucent #3632-53, Akzo Nobel, no embossment.

QT Kitchens Panel: Sign panel

Unlead & Prem Panels: .177" thickness Cyro Acrylic with 1/4" Radius Corners. Panels are painted 2nd Surface with Akzo Noble Opaque Black Background with Translucent White Text

Diesel Panel: .177" thickness Cyro Acrylic with 1/4" Radius Corners. Panels are painted 3M 3632 GPS-26 Green with Matching PMS #349C Green with Translucent White Text

Logo Cabinet/Pricer Cabinet/Base: Aluminum Construction, Internally illuminated with GE Tetra PowerStrip DS65/GE PS24 Power Supplies. LOGO Cabinet painted Akzo Noble, QT Red SIGN9141 Low Gloss. Pricer Cabinet and Base painted Akzo Noble Black Low Gloss. Accent Trim section painted 1st surface Akzo Noble Silver-Low Gloss.

SCALE: 1/4" = 1'-0"

SERIAL NUMBER: MV12-3PQ

STORE NUMBER:

C:\Vault_QT\Library\Presentation\Elevations\Signage\Standard Monument Signs\MV12-3PQ.dwg - I_#00 PlotDate: 12/10/2014 3:42 PM - Kim, Joe