PHOTOMETRICS LUMINAIRE SCHEDULE

Symbol	Label	Qty	Catalog Number	Description	MANUFACTURER	Lamp	File	Lumens	LLF	Watts
	P3	8	LA2121-80wLED-T3-5K-400mA	LED POLE TOP ALUMINUM REFLECTOR LEDS WITH OPTICS	ANP LIGHTING	LEDS	LA2121-80wLED-T3-5K-400mA.IES	5688.345	0.9	84.63
	B	5	BLO2	BOLLARD WITH LOUVERS AND CLEAR PLASTIC LENS.	ANP LIGHTING	ONE VENTURE 50 WATT MH LAMP.	BL6051-50MH-T19314.IES	3400	0.85	50
	C	21	101-MT-(2)42TRF-120V	100 LINE SCONCE	PHILIPS GARDCO	(2)42W TRITUBE FLUORESCENT	101-MT-(2)42F.IES	3200	0.85	92

STATISTICS

Description	Symbol	Avg	Max	Min	Max/Min	Avg/Min
NORTH PARKING ONLY	✳	0.8 fc	3.7 fc	0.1 fc	37.0:1	8.0:1
WEST PARKING ONLY	✳	0.9 fc	5.8 fc	0.1 fc	58.0:1	9.0:1

NOTE:
1. C FIXTURES WERE USED AS AN ESTIMATION FOR POSSIBLE BUILDING MOUNTED FIXTURES. REFER TO BUILDING ENGINEERING PLANS FOR ALL BUILDING MOUNTED FIXTURES.

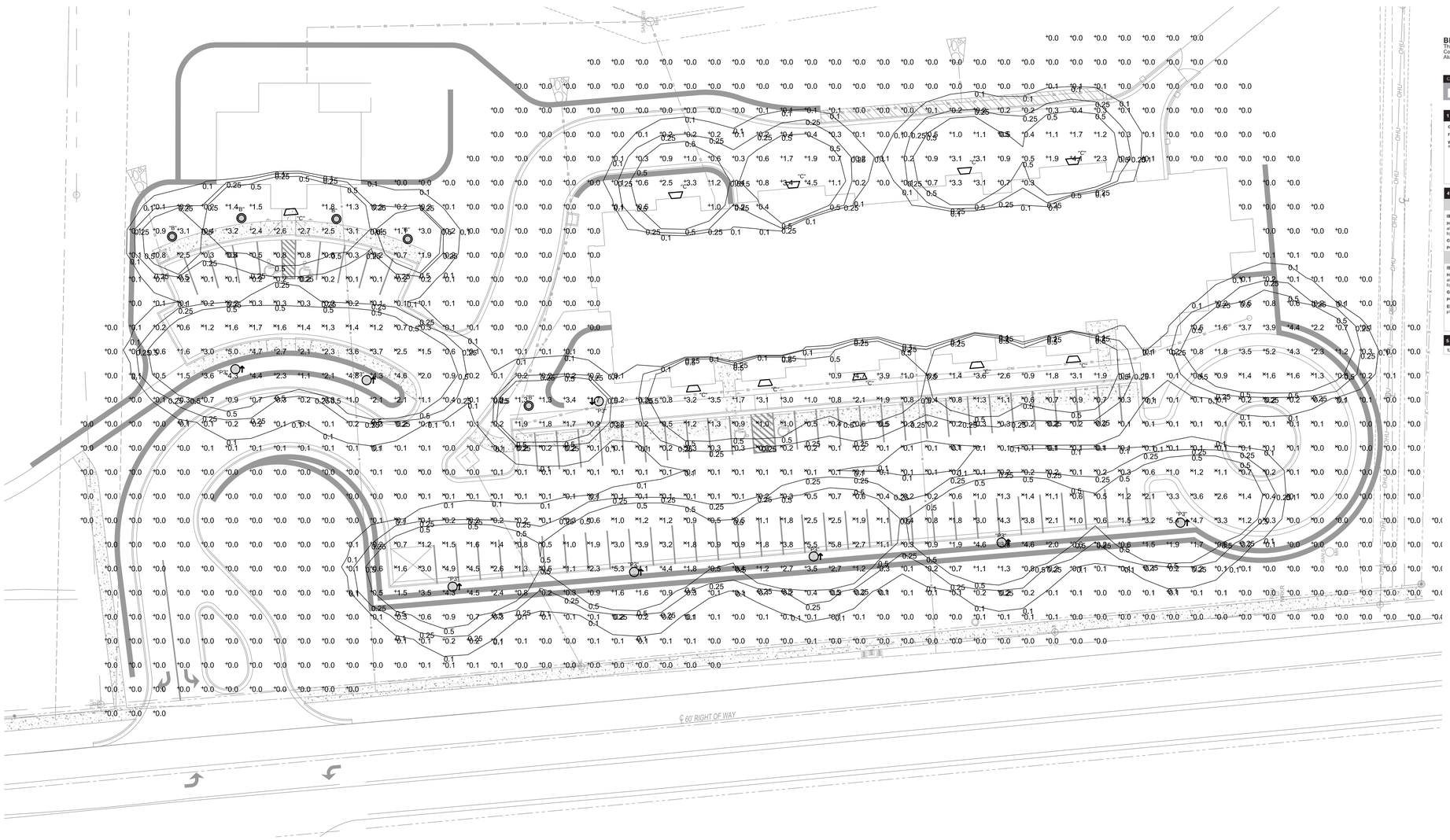

1 SITE PHOTOMETRICS PLAN
SCALE: 1" = 20'-0"

ANP Lighting — Specifications LA792

Project:
Customer No:
Fixture Type:
Quantity:

Weight:
EPA: 1.4

Catalog Logic
LA792 3 PR M037LD D T5 27K PC 41
Lumens Series | Parabolic or Flat Lens | Voltage/Cutoff Semoptic dimming | Dim | CCT | Accessories | Finish

LA792
Modular LED luminaire with a 4-strut design. Bold new look for pedestrian and roadway lighting. Available in four sizes for post and wall mount applications.

Catalog Number: LA792 | 1 | 2 | 3 | 4 | 5 | 6 | 7 | 8

1 FIXTURE ORIENTATION
1 Post

2 LENSES
NL (No lens)

3 WATTAGE / CATALOG # PLATFORM

46w	P046LD4
78w	P078LD4

4 DIMMING or No DIMMING
N (No Dimming)
D (Dimming - default 0-10v DC)

5 OPTICS PLATFORM
T2 (Type II)
T3 (Type III)
T5 (Type V)

6 COLOR TEMPERATURE (CCT) PLATFORM

CCT	Catalog #
2700K	27K
3500K	35K
4000K	40K
5000K	50K

7 ACCESSORIES
HSS (House side shield is made from polished aluminum for high reflectivity with 120 degrees light blockage)
PC (Photo Cell)
EMG (Emergency Backup Ballast - Remote Only)
TLPC (Twist Lock Photocell)

LED PERFORMANCE PLATFORM

LED Wattage	CCT	Lumens	System Wattage	Efficacy
46w	2700K	3450	46w	80
46w	3500K	3510	46w	85
46w	4000K	5014	46w	109
46w	5000K	5290	46w	115
78w	2700K	6000	80w	80
78w	3500K	6800	80w	85
78w	4000K	8720	80w	109
78w	5000K	9200	80w	115

8 FINISH
* Std. = Standard Grade, Marine = Marine Grade

*Std.	*Marine		*Std.	*Marine	
40	NA	Raw (Unfinished)	53	118	Copper Clay
41	101	Black	56	109	Silver
42	102	Forest Green	61	106	Black Verde
43	114	Bright Red	70	118	Charcoal Metallic
44	107	White	71	105	Painted Copper
45	112	Bright Blue	72	108	Textured Black
46	123	Sunny Yellow	73	125	Matte Black
47	120	Aqua Green	76	121	Textured Architectural Bronze
49	NA	Galvanized	77	127	Textured White
50	111	Navy	78	124	Textured Silver
51	103	Architectural Bronze	10	130	Aspen Green
52	104	Patina Verde	11	131	Cantaloupe
12	133	Lilac	13	132	Putty

Consult factory for additional paint charges and availability

ANP Lighting — Specifications BL0210

Project:
Customer No:
Fixture Type:
Quantity:

Weight: 49 lbs

Catalog Logic
BL0210 - CL - 70MH - R5 - IBOLT -120- 72
Bollards Series | Lens | Light Source & Wattage | Optic | Accessories | Voltage | Finish

BL0210
This Bollard has a dome top and is made Completely of Cast Aluminum Construction with a decorative Fluted Column body and Angled Cast Aluminum Louvers. The lens is available in Clear, White or Frosted.

Catalog Number: BL0210 | 1 | 2 | 3 | 4 | 5 | 6

1 LENSES
CL (Clear polycarbonate-acrylic option available)
FR (Frosted)
WH (White/opal polycarbonate material -acrylic option available)

2 LIGHT SOURCES & WATTAGES

High Pressure Sodium/ Metal Halide (HID)

WATTAGES
50MH
50HPS
70MH
70HPS

Fluorescent (WPL)

WATTAGES
26WPL
32WPL
42WPL
26WPLD/M
32WPLD/M
42WPLD/M

DIM (default 0-10v DC)

3 OPTICS

High Pressure Sodium/Metal Halide (HID)
R5 (Refractor producing typical TypeV Light distribution, made of glass borosilicate)

Fluorescent (WPL)
R5 (Refractor producing typical TypeV Light distribution, made of glass borosilicate)

4 ACCESSORIES

High Pressure Sodium/Metal Halide (HID)

IBOLT
HSS (House side shield is made from polished aluminum for high reflectivity with 120 degree light blockage)
GFI
PC (Button Photo Cell)

Fluorescent (WPL)

IBOLT
HSS (House side shield is made from polished aluminum for high reflectivity with 120 degree light blockage)
GFI
PC (Button Photo Cell)
EMG (Emergency Back-up ballast – remote placement)

5 VOLTAGES
120 | 208 | 240 | 277

6 FINISHES
* Std. = Standard Grade, Marine = Marine Grade

*Std.	*Marine		*Std.	*Marine	
40	NA	Raw (Unfinished)	53	118	Copper Clay
41	101	Black	56	109	Silver
42	102	Forest Green	61	106	Black Verde
43	114	Bright Red	70	118	Charcoal Metallic
44	107	White	71	105	Painted Copper
45	112	Bright Blue	72	108	Textured Black
46	123	Sunny Yellow	73	125	Matte Black
47	120	Aqua Green	76	121	Textured Architectural Bronze
49	NA	Galvanized	77	127	Textured White
50	111	Navy	78	124	Textured Silver
51	103	Architectural Bronze	10	130	Aspen Green
52	104	Patina Verde	11	131	Cantaloupe
12	133	Lilac	13	132	Putty

Consult factory for additional paint charges and availability

NSPJ
Nearing Staats Prelogar & Jones AIA Chartered Architects
3515 W. 75th St., Ste. 201
Prairie Village, Kansas 66208
www.nspjarch.com
Phone 913.831.1415 Fax 913.831.1563

Lake Pointe Lodge
Near Clark Ave. & Highway 9
Parkville, Missouri

Revisions

Date
January 30, 2014
Job No.
503711
Sheet No.
E1.0

01.30.15 PRELIMINARY DEVELOPMENT PLAN

LIGHT FIXTURE SCHEDULE

SYMBOL	TYPE	MOUNTING	DESCRIPTION, LOCATIONS & NOTES	MANUFACTURER & CAT. No.	LAMPS QUAN./TYPE	BALLAST QUAN./TYPE	VOLTS WATTS	NOTES
	P3	POLE	LED POST TOP LANTERN. BLACK FINISH -PARKING LOTS	ANP LIGHTING# LA792-1-NL-P078LD4-N-T3-50K-41 POLE: CB0504-4S12-125-41	N/A LED	N/A 400mA DRIVER	MVOLT 78	1, 2
	B	FLOOR	8" DIAMETER DOME TOP CAST ALUMINUM BOLLARD -PEDESTRIAN WALKWAYS	ANP LIGHTING# BL0210-CL-50MH-R5-208-41	1 50W MH	1 ELECTRONIC	208 55	2
			**CONFIRM COLOR OF ALL FIXTURES AND POLES WITH DEVELOPEMENT STANDARD, BLACK SHOWN AS BASIS OF DESIGN					

NOTES:

1) PROVIDE ALL COMPONENTS TO ENSURE A COMPLETE ASSEMBLY. THIS WOULD INCLUDE, BUT NOT BE LIMITED TO, MOUNTING BRACKETS, POLE AND BASE, ANCHOR BOLTS, TEMPLATE, AND HAND HOLE.

2) PROVIDE CONCRETE BASE

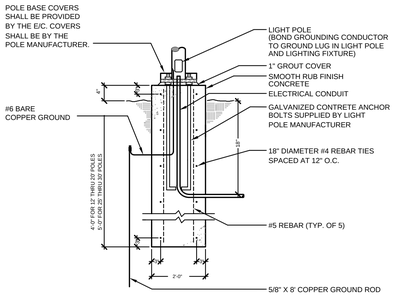

NOTES:

1. PROPER BOLT CIRCLE ALIGNMENT SHALL BE INSURED BY TYING OR CAGING METHODS BEFORE POURING FOOTING.

4 PEDESTRIAN SCALE POLE FOUNDATION
SCALE: NTS

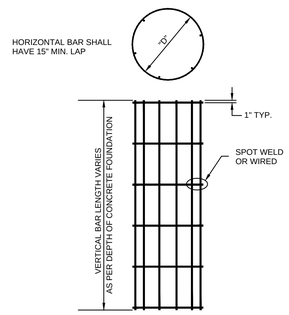

REBAR SCHEDULE				
FDN. DIA.	FDN. LENGTH	REBAR CIRCLE "D"	VERTICAL REBAR LENGTH	HORIZONTAL REBAR SPACING
18"	4'	14"	3'-6"	14" MAX.

3 REBAR CAGE DETAIL
SCALE: NTS

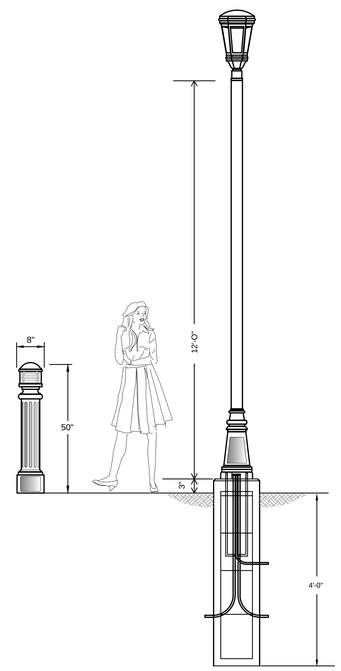

2 LIGHT POLE DETAILS
SCALE: NTS

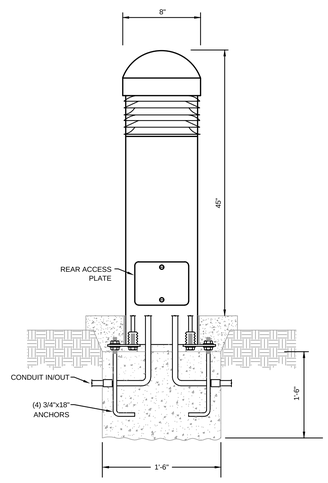

1 BOLLARD DETAIL
SCALE: NTS

01.30.15 PRELIMINARY DEVELOPMENT PLAN

NSPJ
NEARING STAATS PRELOGAR & JONES AIA CHARTERED
ARCHITECTS
3515 W. 75TH ST., STE. 201
PRAIRIE VILLAGE, KANSAS 66208
www.nspjarch.com
PHONE: 913.831.1415 FAX: 913.831.1563

LAKE POINTE LODGE
NEAR CLARK AVE. & HIGHWAY 9
PARKVILLE, MISSOURI

REVISIONS

DATE
January 30, 2014
JOB NO.
503711
SHEET NO.
E2.0